IRINOX
The Freshness Company®

Item No.:
Qty.:
Project:

EASYFRESH® NEXT M

The propane EasyFresh® Next blast chiller can be customised based on individual needs and includes up to 8 functions and 14 cycles chosen for you by Irinox to preserve the freshness of the products for longer. Easy to use, it allows the parameters of each cycle - temperatures, times and ventilation - to be changed in a few simple steps.

Yield

Rapid cooling (+90°C/+3°C) within 90 min	kg 45
Fast freezing (+90°C/-18°C) within 240 min	kg 45

*Tests carried out in compliance with the Irinox procedure using 5-cm thick beef.

Capacity

Number of trays: 18 x GN1/1 or 600x400 (H= 20 mm)

Number of trays: 12 x GN1/1 or 600x400 (H= 40 mm)

Number of trays: 9 x GN1/1 or 600x400 (H= 65 mm)

Standard construction details

- Door opening on the left with hinges on the left.
- Patented concealed hinges.
- Full height door with double bevelled side edges.
- Door opening up to 150°.
- Magnetic and slow closing of the door.
- Equipped with 5-chamber gasket designed for high and low temperatures.
- Core probe with 1 detection point with quick screw connector, anti-corrosion, watertight IP67.
- Magnetic flat surface (400x150 mm) to fix the core probe.
- Easy removal and cleaning of the condenser filter thanks to the tilting grill.
- Ergonomic and robust handle made of steel.
- AISI 304 stainless steel internal and external material.
- Built-in air condensation.
- R290 coolant gas.
- MultiRack®, the patented adjustable tray holder that improves air circulation inside the blast chiller.
- 10 pairs of guides included (GN 1/1).
- WI-FI module included for connectivity with FreshCloud®.
- USB port for downloading HACCP reports.

IRINOX
The Freshness Company®

Item No.:
Qty.:
Project:

Operation

2 available configurations:
Essential. This is the basic configuration that includes the most popular blast chiller functions: rapid cooling, fast freezing, cold storage, non-stop cooling and freezing, and defrosting. Regardless of the temperature at which the product is introduced, it always guarantees excellent results in terms of quality and temperature uniformity inside the cell.
Excellence. The multi-function configuration including 8 functions. In addition to the cold functions, in the Essential configuration you will find: defrosting, marinating, ice cream reconstitution.

- EasyFresh® Next's cooling cycles lower to +3°C the core temperature of the food, introduced at any temperature, even as soon as it is out of the oven, and quickly cross the band of maximum bacterial proliferation, the cause of its natural ageing.
- The EasyFresh® Next's freezing cycles transform the water contained in food into microcrystals that preserve its structure and quality for longer.
- At the start of the cycle, the operator can choose whether to use the core probe (automatic mode) or to work in time mode (manual mode).
- The non-stop cycles continuously cool or freeze to the desired temperature quantities of food that are prepared and placed in the blast chiller in succession. Set a notification when the chosen temperature or cycle time is reached.
- The cold storage cycles allow the blast chiller to be transformed into an additional space for storage at the desired temperature for short periods of time.
- The defrost cycle allows to choose the temperature and time at which your food is defrosted and ready for use, slowing down the bacterial growth process.
- The marinating cycles allow to set the time and temperature for marinating products, enhancing the flavour, tenderness and juiciness of meat and fish.
- The ice cream reconstitution cycle allows to quickly bring the ice cream to display temperature in the shop window, ready for sale.
- The defrost cycle removes ice and excess condensation. It has an adjustable duration of 30 minutes and must be run at the end of the day or after intensive use with a high number of door openings.

Performance
EasyFresh® Next guarantees a cooling and freezing capacity of 45 kg, thanks to the new dual-circuit propane refrigeration system.
In the Essential configuration, performance is ensured by two independent circuits with reciprocating compressor, ventilated evaporator and a single-speed condenser fan.
In the Excellence configuration, the blast chiller uses 5-speed "EC" electronic evaporator fans.
Thanks to its climate class 5 design, the blast chiller guarantees the stated performance up to an ambient temperature of 40°C.

Interface
4.3" display with capacitive colour screen. With acoustic signal with adjustable intensity and fixed tone.
The operator has the possibility of customizing and/or creating new cycles, which are stored in the library.

Connectivity
FreshCloud® is Irinox's IOT technology that allows to control and interact with EasyFresh® Next at any time via an APP. The functions included in the application are:
- Remote monitoring of the cycle in progress: connection status, cell temperature, core temperature, kitchen and machine name, cycle ID in progress, cycle and phase progress.
- Remote parameter modification (ventilation, cabinet temperature, core probe temperature, phase duration, cycle management).
- Machine status monitoring: connection status, machine ID, laboratory name, serial number, door status, Sanigen® level.
- Usage statistics viewing.
- Haccp report download.
- Software update.

Optional

- Door opening on the right with hinges on the right.
- Adjustable lowered feet H = 80 - 115 mm.
- 4 wheels, 2 of which with brake.
- Sanigen® (Irinox patented sanitization system).
- Pair of additional GN1/1 and 600x400 mm guides.
- Special voltages on request.
- 1 point vacuum probe.
- Unit sent without gas charge.

Product warranty

- 12 months from the date of receipt of the equipment; 24 months from the date of installation, subject to completion and submission of the installation report on FreshCloud®. For more details, see the sales conditions available at www.irinoxprofessional.com.

IRINOX
The Freshness Company®

Item No.:
Qty.:
Project:

EASYFRESH® NEXT M

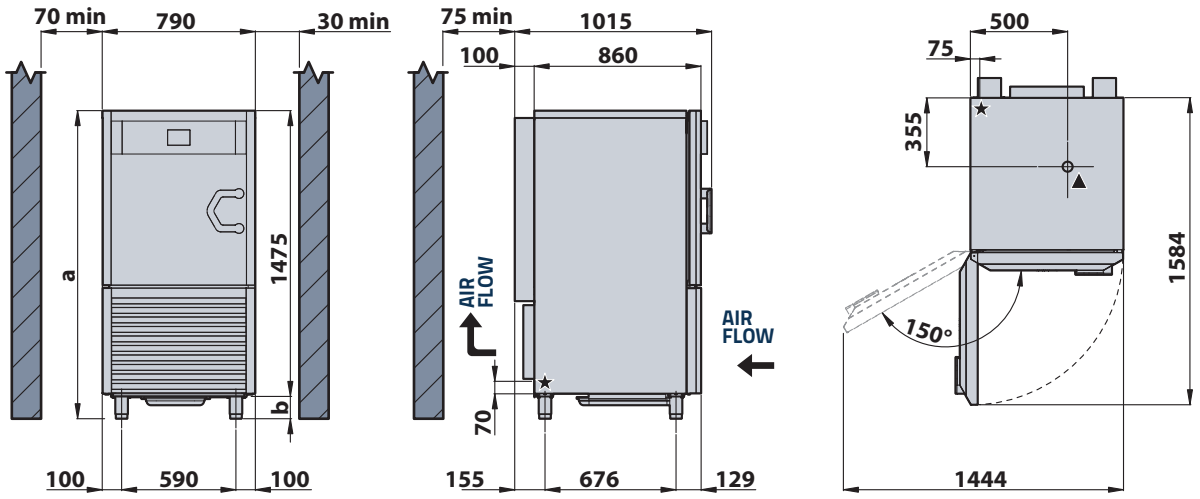

HEIGHT		a	b
Standard feet	mm	1590 ÷ 1640	115 ÷ 165
Lowered feet option	mm	1555 ÷ 1590	80 ÷ 115
Wheel options	mm	1630	155

Measures in millimetres

★ **Main power cable**

▲ **Water drainage (corrugated hose Ø32mm)**

TECHNICAL SPECIFICATIONS

Power supply	-	400V-3N+PE 50Hz		400V-3N+PE 60Hz		230-3+PE 60Hz		200V-3 50/60Hz
PERFORMANCE		ESSENTIAL	EXCELLENCE	ESSENTIAL	EXCELLENCE	ESSENTIAL	EXCELLENCE	ESSENTIAL
Rated cooling power	W	2472	2592	2956	3076	2956	3076	2961
Rated cooling current	A	6.1	7.3	7.3	8.6	13.8	14.3	13.8
Rated heating power	W	-	1650	-	1650	-	1650	-
Rated heating current	A	-	7.7	-	7.5	-	7.5	-
Power cable section	mm^2	5G1.5		5G1.5		4G2.5		4G2.5
Cooling capacity (-10/+40°C)	W	3914		4706		4706		4706
Condenser power output (-10/+40°C)	W	5754		6918		6918		6918
Minimum ventilation air flow	m^3/h	2295		1595		2595		2595
Coolant	-	R290 -150g x 2		R290 -150g x 2		R290 -150g x 2		R290 -150g x 2
Climate class (according to EN23953-2)	-	5		5		5		5
Min/max installation ambient temperature	°C	15 / 40°C		15 / 40°C		15 / 40°C		15 / 40°C
Max installation elevation	m	2000		2000		2000		2000
Internal cell of dimensions (W x D x H)	mm	650 x 420 x H795		650 x 420 x H795		650 x 420 x H795		650 x 420 x H795
Equipment weight	kg	190		190		190		190

IRINOX
The Freshness Company®

Item No.:
Qty.:
Project:

WATER CONDENSATION TECHNICAL DATA

	COOLED WATER	TOWER WATER
MIN/MAX inlet water temperature	+10 / +22 °C	+23 / +35 °C
Condensation temperature	25 °C	40°C

MAX WATER CONSUMPTION DEPENDING ON WATER TEMP INLET/OUTLET

Outlet-inlet water temp. difference	MAX WATER CONSUMPTION [l/h]		MAX WATER CONSUMPTION [l/h]	
	50Hz	**60Hz**	**50Hz**	**60Hz**
5	1159	1435	990	1190
10	580	718	495	595
15	386	478	330	397

ENERGY CONSUMPTION ACCORDING TO EN 17032

Full load capacity	kg	35
Energy consumption Blast chilling cycle (STRONG +3 °C)	kWh/kg	0,069
Blast chilling cycle from/to +65 °C / +10°C	min	71
Energy consumption Blast freezing cycle (STRONG -18 °C)	kWh/kg	0,208
Blast freezing cycle from/to +65 °C / -18°C	min	239

INSTALLATION
The blast chiller must be installed following and complying with what is stated in the appropriate installation manual.
The contents of the manual must be carefully followed to ensure correct operation and to protect the user's rights under the warranty.

Continuous product development may require changes to specifications without notice.

Irinox SpA
Headquarter: Via Caduti nei Lager 1 - 31015- Conegliano (TV) Italy
Productive Site: Via Mattei, 20 - 31029 - Vittorio Veneto (TV) Italy
Tel. +39 0438 2020 | irinox@irinox.com | www.irinoxprofessional.com

CB report valid only for ESSENTIAL and AIR CONDENSATION version